Subject: SMUD Uses Helicopter to Install ClampStar & Lightning Protection Part 3

ClampStar Newsletter

October 13, 2011

Greetings,

Welcome to the ClampStar newsletter. This monthly newsletter is where we periodically highlight a variety of unique and interesting ClampStar stories and offer educational, industry related tips.

This month, guest author Jonathon Woodworth of AressterWorks continues his very informative series on Lightning Protection of Power Systems - Then and Now.

CLICK TO SEE:

- ✓ Demo Video
- ✓ Utility Photos
- ✓ IR Video
- ✓ Test Reports
- ✓ Installation Video
- ✓ Past Articles

Lightning Protection of Power Systems - Then and Now - Part 3

By Jonathan Woodworth ArresterWorks

This part of the History of Surge Protection in Power Systems takes us through the Silicon Carbide Arrester Era to the beginning of the Metal Oxide Varistor Era. The Expulsion type arrester was developed during this time period and in some cases outperformed the SiC arrester.

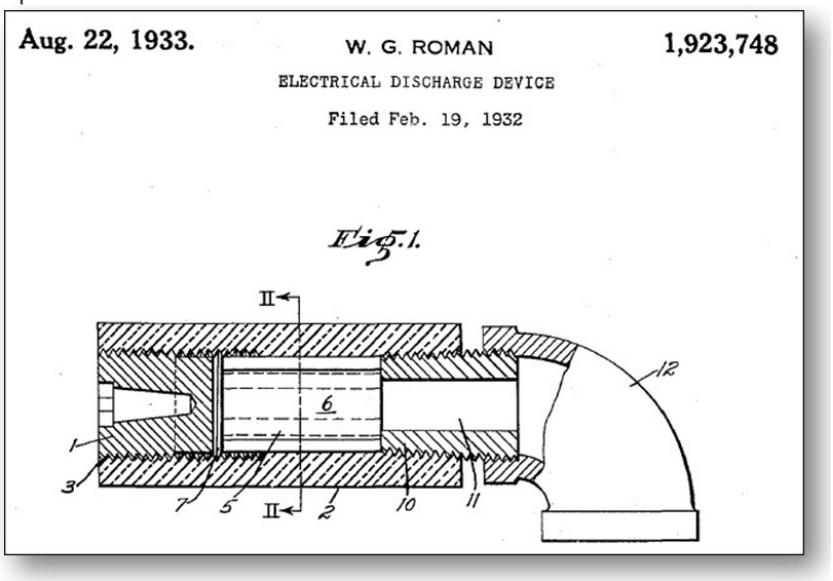

We also see during this time period the continued dominance of the GE and Westinghouse arrester design teams as well as the beginning of the end for these long time rivals and giants. Other changes include the following: Ohio Brass, Line Material, and Joslyn Manufacturing emerge as formidable suppliers of arresters; the ESSCO Company from Philadelphia disappears; standards for arresters are first published and go through significant changes as the arrester designs continue to evolve.

Read more.....

Custom ClampStar

Do you have an upcoming connector repair or up-rate project? Give us a call, or click here. One of our application engineers will be happy to discuss your project

Next Month's Topic

"Lightning Protection Part II" (Click here to automatically receive future editions of this newsletter.)

Classic Connectors

Before Your Lines Fall
Give Us A Call
800-269-1462

SMUD Uses Helicopter to Install ClampStar Unit After IR Inspection Identifies Hot Splice

Jim Wilhelm, Tower Patrol T&D Assets, Distribution Services Lineman for Sacramento Municipal Utility District said "Installation was difficult due to the movement of the helicopter, but allowed us to do this over a deep gorge, not accessible from a bucket truck. Had we not had ClampStar, this would have required a minimum of an 8 hour outage on the line, purchasing wheel (backup) power, letting the line down to the ground and changing out the splice and adding about 150' of conductor in the "old" conventional manner of repair.

It would have been even easier if we could have worked it with the skid board on the chopper, but because it was the middle phase, it required the work be done suspended 60 feet below the aircraft. It is significantly more difficult to hover steady in this position, as the pilot has no close reference point on which to fix his position."

"With ClampStar, not only did we save many thousands of dollars and many man-hours but got the extra benefit of having a superior connection, much better than we would have if we had put yet another connector up in place of the one that had already failed!"

Click here to see SMUD IR photos

If you're ready to start experiencing all the benefits that ClampStar has to offer, please contact us and we'll be sure to get you 'connected'.

Sincerely,

Chris Costanzo
Director, Marketing and Communications
NA Classic Connectors, Inc.
800-269-1462 Ext. 1

©2010 CLASSIC CONNECTORS, INC. All rights reserved
800.269.1462 Proudly Made in the USA