Tel.800-269-1462 Fax.800-311-9857
382 Park Avenue East
Mansfield, OH. 44905

www.ClassicConnectors.com

Classic Connectors, Inc.

ClampStar® CSS-1386FT-DE-XXX-X
Special Installation Procedure For 1386 Series Dead End Assemblies

These instructions do not claim to cover all details or variations in equipment or installation, nor to provide for all possible conditions concerning installation, operation or maintenance of this equipment. If further information is desired or if particular problems are encountered which are not sufficiently covered in this guide, contact Classic Connectors, Inc. at the above address or telephone numbers.

This installation instruction is written for "Bare-Hand" installation on Energized Conductors, and assumes only qualified individuals with appropriate training and certification will be performing the work. It is not intended to serve as a "Safety Procedure." All "Safety Procedures", clearances and methods, as adopted by the user shall be strictly followed. The product may also be installed with Live Line Tools (Hot-Sticks), and the use of those tools are to be determined by those performing the work, and will not be addressed in this instruction set.

ClampStar® assemblies come individually packaged in sealed plastic bags with their cable grooves factory-loaded with proprietary inhibitor compound. The assembly shall be kept in the sealed container prior to installation to prevent dust/dirt contamination. Additional inhibitor is not required and alternate inhibitor compounds shall not be used.

This first illustration is that of a completed installation. Transmission class ClampStar® dead end units are available for "*Left*" or "*Right*" configuration, later described, per customer designation. The unit in this illustration represents a "*Right*" configuration.

NOTE: THESE INSTRUCTIONS ARE PROVIDED WITH THE "EMERGENCY ORDER" OF MARCH 2020. THERE ARE IMPORTANT NOTES REGARDING "ORIENTATION" OF THE HEADS. DUE TO THE SHORT DELIVERY TIME, WE UTILIZED AVAILABLE COMPONENTS, WHICH IN PARTICULAR DO NOT HAVE THE STOP FEATURE THAT PREVENTS IMPROPER ORIENTATION. SPECIAL NOTES ARE IN RED.

PLEASE READ AND UNDERSTAND THESE INSTRUCTIONS BEFORE BEGINNING INSTALLATION!

Begin by familiarizing yourself with the parts and components provided for a ClampStar® installation. This labeled nomenclature will be utilized throughout this installation instruction document.

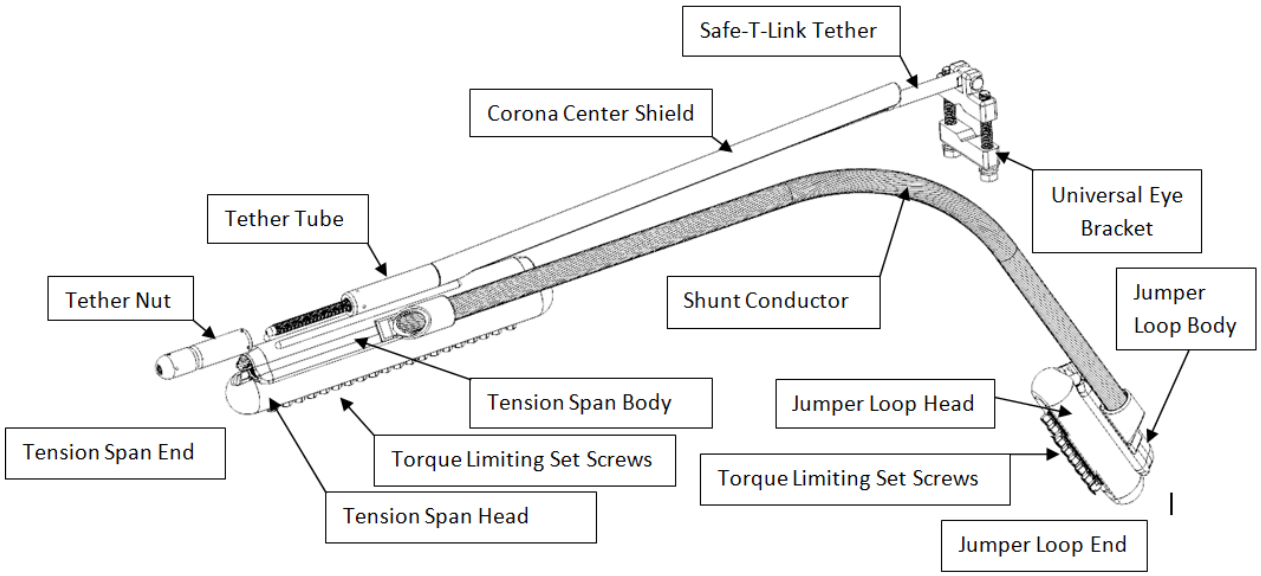

As stated on page 1, ClampStar® Transmission Class Connectors are provided in "*Left*" and "*Right*" configuration, at the customer designation. It is preferable to install the ClampStar® with the "*Shunt Conductor*" in-board of the utilities existing span and jumper conductor. If the units are installed in pairs on twin bundled sub-conductor, the "*Shunt Conductors*" should face each other, in-board of the tension span conductors to facilitate the use of a conductor cart, therefore a "*Left*" and "*Right*" unit would be paired for this application.

THE FOLLOWING SECTION ON "*Right Hand*" vs "*Left Hand*" IS NOT PERTINENT TO THE INSTALLATION OF THESE THREE UNITS. NOR IS IT AN IMPERATIVE ISSUE, IT PERTAINS TO "TRAINING" OF THE CLAMPSTAR SHUNT CONDUCTOR, AND MAY FACILITATE THE INSTALLER RELATED TO ASSURING COMPONENTS DO NOT RUB TOGETHER, POTENTIALLY CAUSING ABRASION.

Determining "*Right Hand*" vs "*Left Hand*" ClampStar® configurations:

To assure the proper ClampStar® is selected, one must be familiar with the naming convention for LH or RH designation. The designation controls whether the "*Shunt Conductor*" is located on the "*Left*" or "*Right*" of the connector, as indicated in the illustration below.

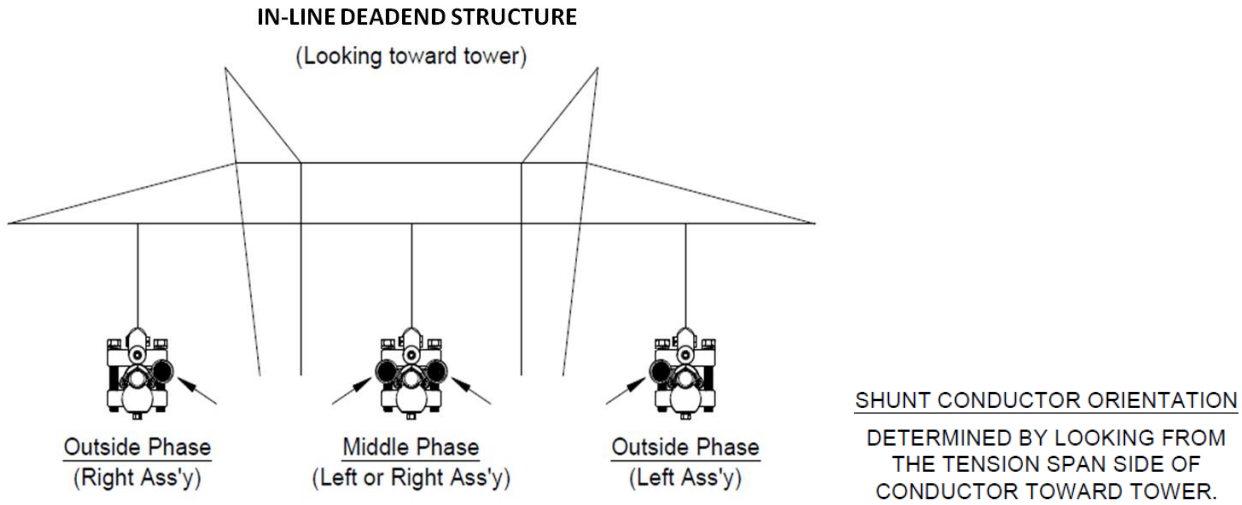

In-Line Deadend Structure recommended orientation for use of conductor carts.

The "In-Line" structure depicted above would apply to break angles of 10° or so (not a hard rule).

For structures with a Break-Angle greater than 10° or so (again, not a hard rule), a Left-Hand or Right-Hand ClampStar should be selected and installed such that the shunt conductor does not cross over or under the original dead-end jumper conductor, but is parallel to it.

The following two illustrations depict recommended ClampStar installation on angled deadend towers as labeled. The *purpose* is to train the "shunt conductor" of the ClampStar to the inside of the angle, such that it does not cross the original jumper conductor. In the event the proper version is not available, alternate installations are acceptable provided proper workmanship procedures are employed to "train" the shunt conductor to assure there is no rubbing or clashing between it and other components.

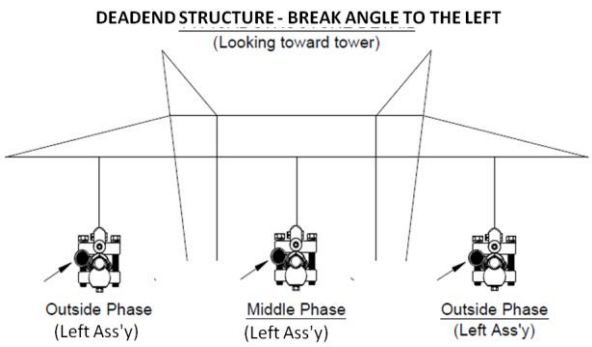

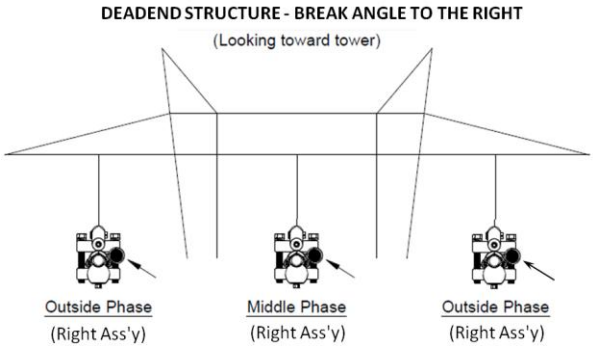

Installation Procedure:

Ensure that the correct ClampStar® part number has been chosen, and that it is appropriate for the application. The package label includes the part number and conductor range based on conductor diameter.

In preparation, determine how the installation is to be performed, in a de-energized application - or on an energized conductor, and if energized, whether the installation will be the "*Bare-Hand*" method, or if it will be completed with "*Hot-Sticks*". It is the responsibility of the crew to be proficient with the type of work planned and familiar with the tools used and applicable safety procedures. Review all pertinent safety instructions and procedures applicable to the voltage class of the line, based on documentation from the operating utility. **NOTE:** If the planned installation is with "*Hot-Sticks*" an installation kit is required, and available, from the ClampStar® factory.

Prepare the ClampStar® Unit

To prepare the ClampStar®; remove the unit from the sealed packaging, taking care to keep dirt/dust from contaminating the pre-applied inhibitor. The unit is shipped with the "*Tether Nut*" backed off, *see illustration below*. Be sure it remains in this position by removing it from the threaded end of the tether and assure there is at least 2"-3" (55-75mm) of exposed thread visible. The length of the "*Tether Nut*" allows the threaded end to be drawn up inside, and serves as a corona shield.

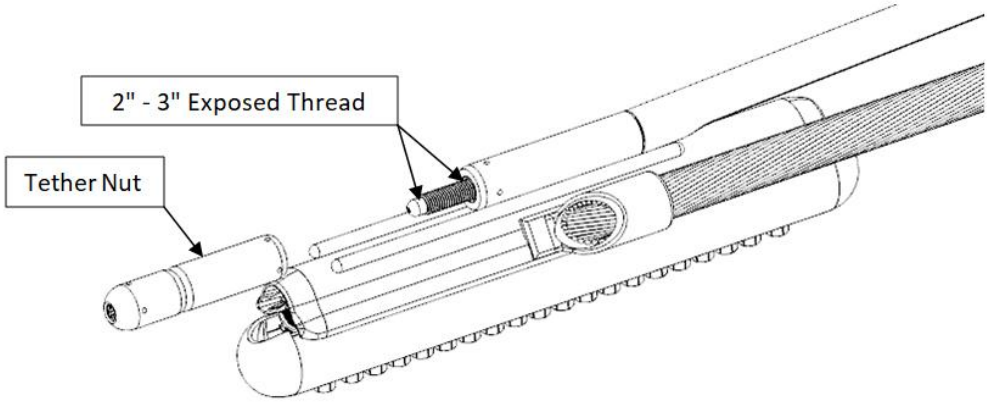

Prepare the Conductor

Begin by preparing the conductor in the locations where the clamping bodies of the unit will be located. It is suggested that the conductor be cleaned approximately 6 inches (100-150mm) beyond the anticipated location to allow for final adjustment of the unit. The location on the tension span is determined by the length of the Safe-T-Link Tether. This distance may be determined by measuring from the pin at the Dead-End Bracket to the inboard end of the Tension End body. Once the first one is figured out, the rest become easy.

Begin approximately 4-6” (100-150mm) away from the mouth of the dead end on the tension span, and clean approximately 30 inches (750mm) of conductor. On the jumper, begin a couple of inches away from the terminal connector, and clean 30 inches (750mm).

Prepare the Conductor (*cont.*)

Brush the conductor vigorously with a clean Stainless Steel wire brush. The intent is to roughen the surface of the conductor that will be in contact with the ClampStar® connector. Dry brushing is all that is required. The inhibitor is preloaded from the factory in the conductor grooves of the ClampStar, and under the keepers as required. **No other inhibitor is to be used**.

Install the "*Universal Eye Bracket*"

Position the platform for ample access and install the "*Universal Eye Bracket*". The "*Universal Eye Bracket*" is designed to fit numerous applications, on eyes - configured either vertically or horizontally, - stub of dead ends with adjustable clevis, etc. To minimize work in the field, the ClampStar® units are shipped with the bracket attached appropriately to the unit and in turn to the Universal Eye Bracket. There should be no need to unpin the bracket from the tether.

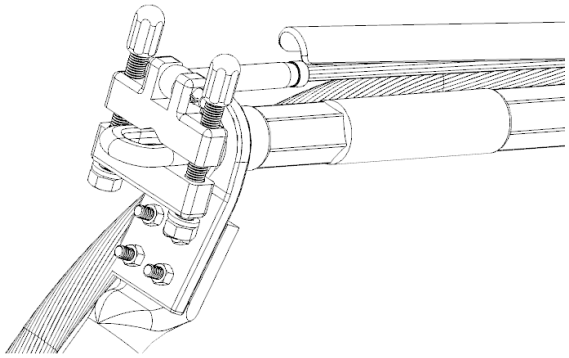

Horizontal Eye Configuration

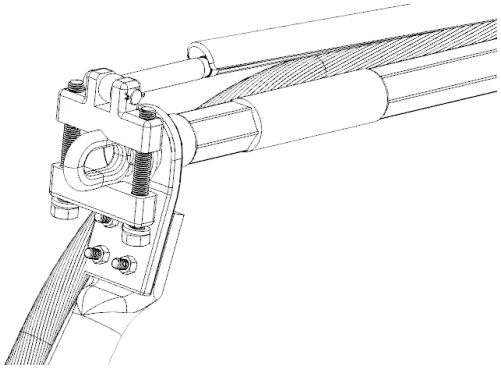

Vertical Eye Configuration

Position the "*Universal Eye Bracket*" as illustrated above, securing it with the bolts. The recommended torque on the ¾" bolt is 115 lbf/ft. Alternate tightening sequence in steps between bolts to achieve and evenly distributed clamp-load.

NOTE, THIS IS THE PART THAT IS SPECIAL. THE TENSION SPAN HEAD, IN THIS INSTANCE IS NOT UNI-DIRECTIONAL AS TYPICAL CLAMPSTAR UNITS. THE HEAD HAS 20 SCREWS, FIVE WHICH SIT HIGHER THAN THE OTHER 15, AND ARE FITTED WITH BLACK RUBBER CAPS. THE HEAD IS TO BE POSITIONED SUCH THAT THESE 5 SCREWS ARE ON THE END TOWARD THE INSULATOR – OPPOSITE THE TENSION SPAN. HEADS ARE SHIPPED IN THE PROPER ORIENTATION AND SECURED WITH A ZIP TIE.

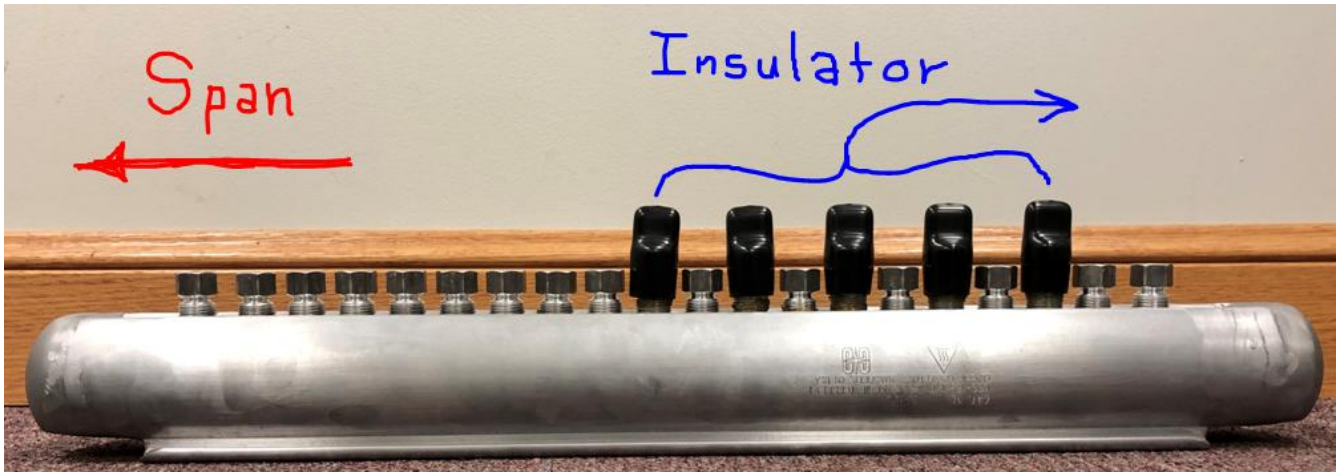

Landing the ClampStar® Tension Span End

The "*Tension Span End*" is the end to which the tether is attached. Remove the zip tie, holding the "*Tension Span Head*" to the "*Tension Span Body*" and slide the head out of the body. Keeping the "*Tether* Cable" moderately tight, and making sure there is no space between the "*Tether Nut*" and the "*Tether Tube*", *see illustration below*, position the "*Tension Span Body*" on the top of the tension span conductor.

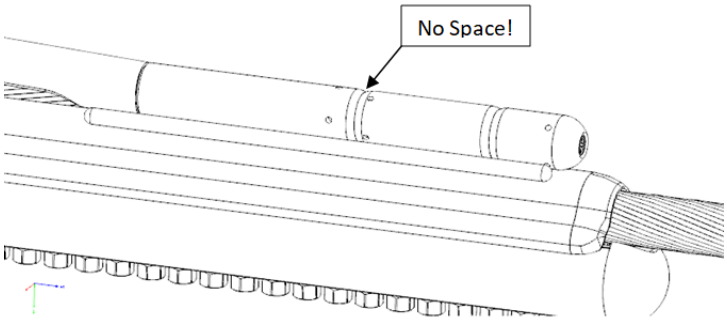

Landing the ClampStar® Tension Span End (*cont.*)

Slide the "*Tension Span Head*", **ORIENTED IN THE PROPER DIRECTION**, into the "*Tension Span Body*" until it contacts the mechanical stops, *see illustrations below*, located in the body slots for the head slides. Tighten the "*Torque Limiting Set Screws*" hand tight, or slightly more, to hold the head against the stops in the body.

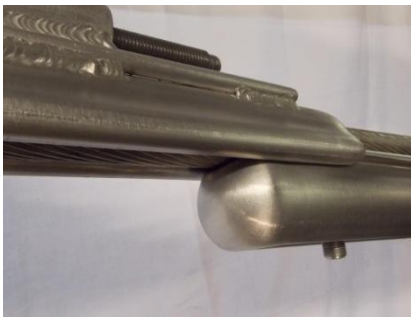

Landing the ClampStar® Jumper Loop End

If the jumper loop conductor has significant curvature in the area where the ClampStar® will ultimately be positioned, it will be helpful to straighten it as much as possible. Shape the "*Shunt Conductor*" somewhat parallel to the tension span conductor and the jumper loop conductor, while making sure it is 2" – 3" (55-75mm) from contacting other fittings. Remove the zip tie holding the "*Jumper Loop Head*" to the "*Jumper Loop Body*" and slide the head out of the body. Position the "*Jumper Loop Body*" over the jumper span conductor. Slide the "*Jumper Loop Body*", which is universal so either end can be started, into the "*Jumper Loop Body*" until it contacts the mechanical stops, located in the body slots for the head slides. Tighten the "*Torque Limiting Set Screws*" hand tight, or slightly more, to hold the head against the stops in the body. **DO NOT TIGHTEN "*Torque Limiting Set Screws*" FOR THIS JUMPER END AT THIS TIME – SOME ADJUSTMENT MAY BE NECESSARY.**

Torque Limiting Set Screws

Transmission Class ClampStar® connectors are supplied with set screws designed to shear at the appropriate torque level. They have proven very accurate, even with power drivers. The use of power drivers, or "Rattle Guns", is recommended as it is a tremendous time saver, and substantially reduces fatigue of the lineman. The

"*Torque Limiting Set Screw*" negates the need for a torque wrench, and assure the proper fastening torque is achieved, and also provide inspectors a means to assure proper installation.

The fasteners may be tightened with either a T-60 Torx® or "star" 6 spline bit, or a ¾" (19mm) socket. A T-45 bit is required to loosen the fasteners after the shear head is snapped off.

Torque Limiting Set Screws (*cont.*)

Tighten The Torque Limiting Set Screws In The Tension Span Head

Move back to the "*Tension Span Head*", verify the "*Tether Cable*" is still moderately tight and the "*Tension Span Head*" is in place against the mechanical stops of the "*Tension Span Body*". If either of these conditions is not complete, loosen the fasteners and reset the unit to achieve both conditions. Proceed to tighten the "*Torque Limiting Set Screws*" per the following instruction.

Go over **THE 15 STANDARD FASTENERS – AND NOT THE FASTENERS WITH THE BLACK CAPS** in a linear fashion, equivalent to the number of layers of aluminum stranding over the core. For example, this conductor has 2 layers of aluminum stranding over 7 steel core strands. Optimally, one will apply torque to each fastener in succession, 2 times, something less than 50lbf/ft (not a critical value) with the 3rd application of torque continuing until the head snaps off. This will occur at 55 lbf/ft (75Nm). If one or two of the fasteners shear during the initial tightening sequence, it is not a concern, just continue with the process.

After all the first 15 fasteners are torqued to shear, remove the black caps from the remaining 5 fasteners. These each may be driven completely in one application until the head shears off the fastener – no need for alternating from one to another.

Adjusting the Tension on the Safe-T-Link Tether

The Safe-T-Link Tether serves as a backup mechanical connection. It is not intended to be used to pull up sag in the conductor, but rather to only be tightened so it is snug, with no slack. In this manner, the original hardware cannot slip or elongate prior to overcoming the mechanical integrity of the tether. This will not require much torque on the adjustment nut. 15-25 lbf/ft (20-30Nm) torque is sufficient. Simply tighten until the tether is straight and under some obvious tension without noticeably altering the alignment of the dead end from its original position. 15 lbf/ft of torque on the "*Tether* Nut" will result in 2000 lbs of tension on the Tether. 1000 to

1500 lbs tension is sufficient for the Tether. If a power driver is used on this operation, it will require a very light trigger finger!
The Tether Nut can be tightened with hand tools with the T-60 Bit, or using a power driver – HOWEVER……
DO NOT OVERTIGHTEN!

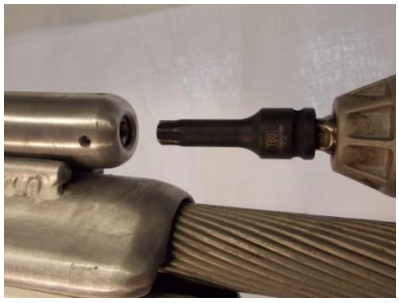

Tighten The Torque Limiting Set Screws In The Jumper Loop Head

Complete the installation by moving back to the "*Jumper Loop Head*." Proceed to tighten the "*Torque Limiting Set Screws*" per the following instruction.
Go over these screws in a linear fashion, in either direction, equivalent to the number of layers of aluminum stranding over the core. For example, this conductor has 2 layers of aluminum stranding over 7 steel core strands. Optimally, one will apply torque to each fastener in succession, 2 times, something less than 50lbf/ft (not a critical value) with the 3rd application of torque continuing until the head snaps off. This will occur at 55 lbf/ft (75Nm). If one or two of the fasteners shear during the initial tightening sequence, it is not a concern, just continue with the process.

The completed installation should resemble the illustration on the front page of this instruction!

* * * * * * *